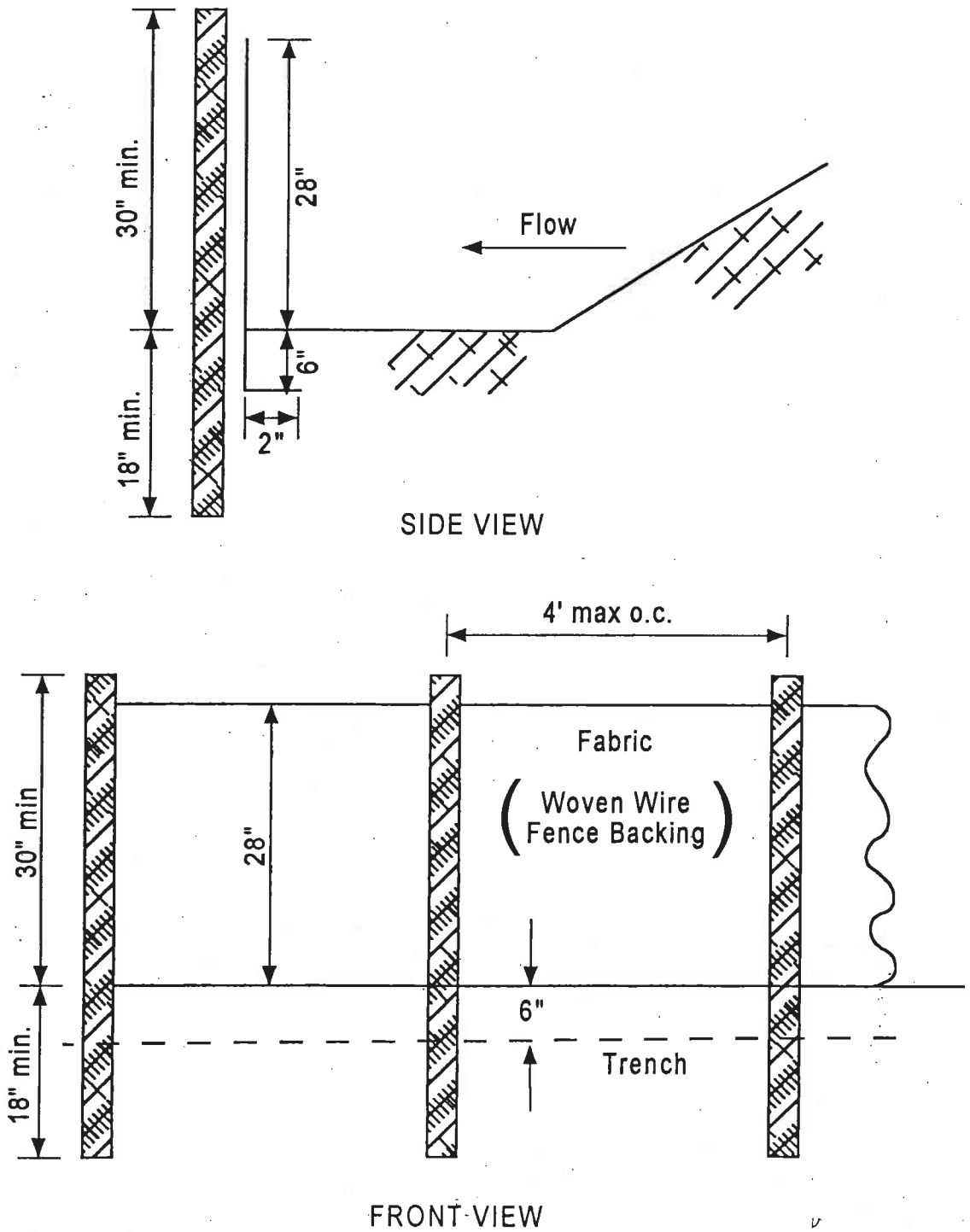

NOTE:
Use 36" D.O.T. approved fabric.
Use steel posts.- only

SILT FENCE - TYPE C

Figure 6-20.6