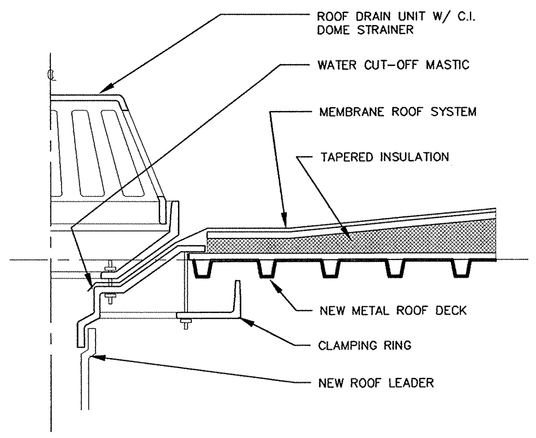

2 A106 ROOF DRAIN
1 1/2" = 1'-0"

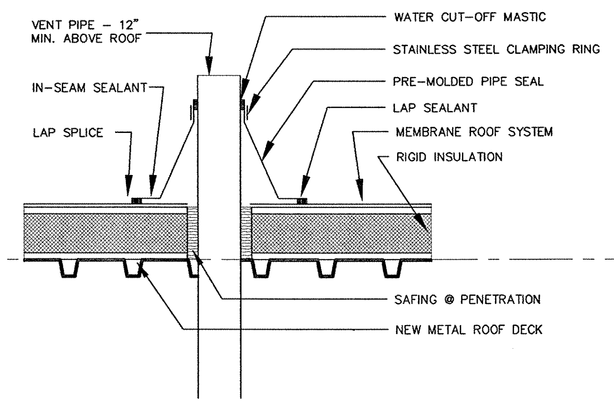

3 A106 VENT THRU ROOF (V.T.R.)
1 1/2" = 1'-0"

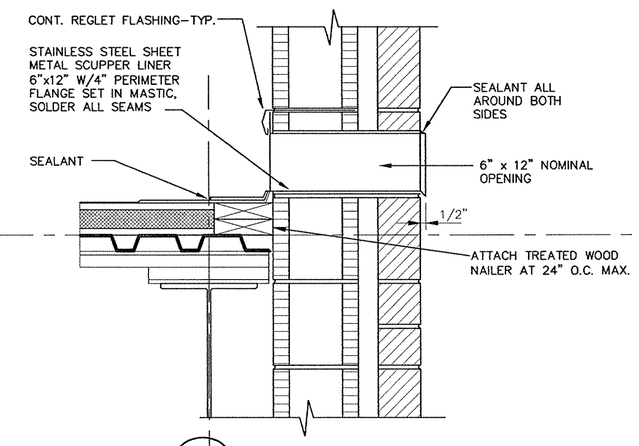

4 A106 THRU WALL SCUPPER
1 1/2" = 1'-0"

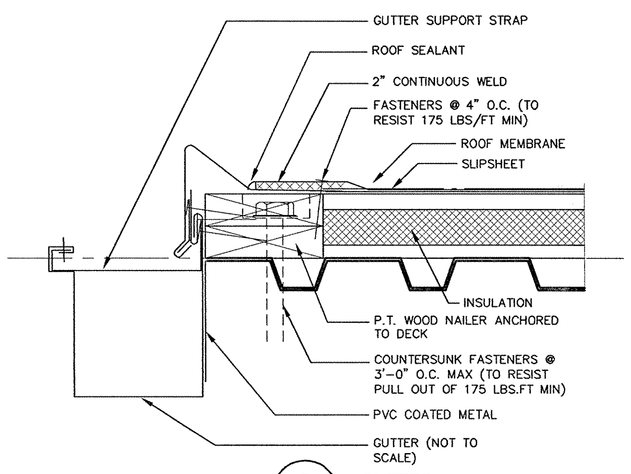

5 A106 GUTTER
3" = 1'-0"

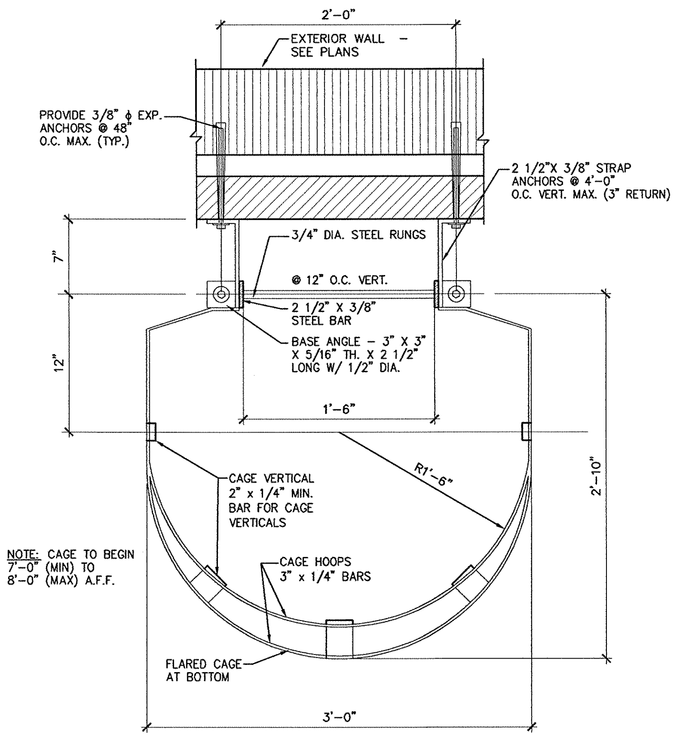

NOTE: CAGE TO BEGIN 7'-0" (MIN) TO 8'-0" (MAX) A.F.F.

NOTE: PAINT EXPOSED METAL SURFACES OSHA SAFETY YELLOW

6 A106 WALL MTD. LADDER
1 1/2" = 1'-0"

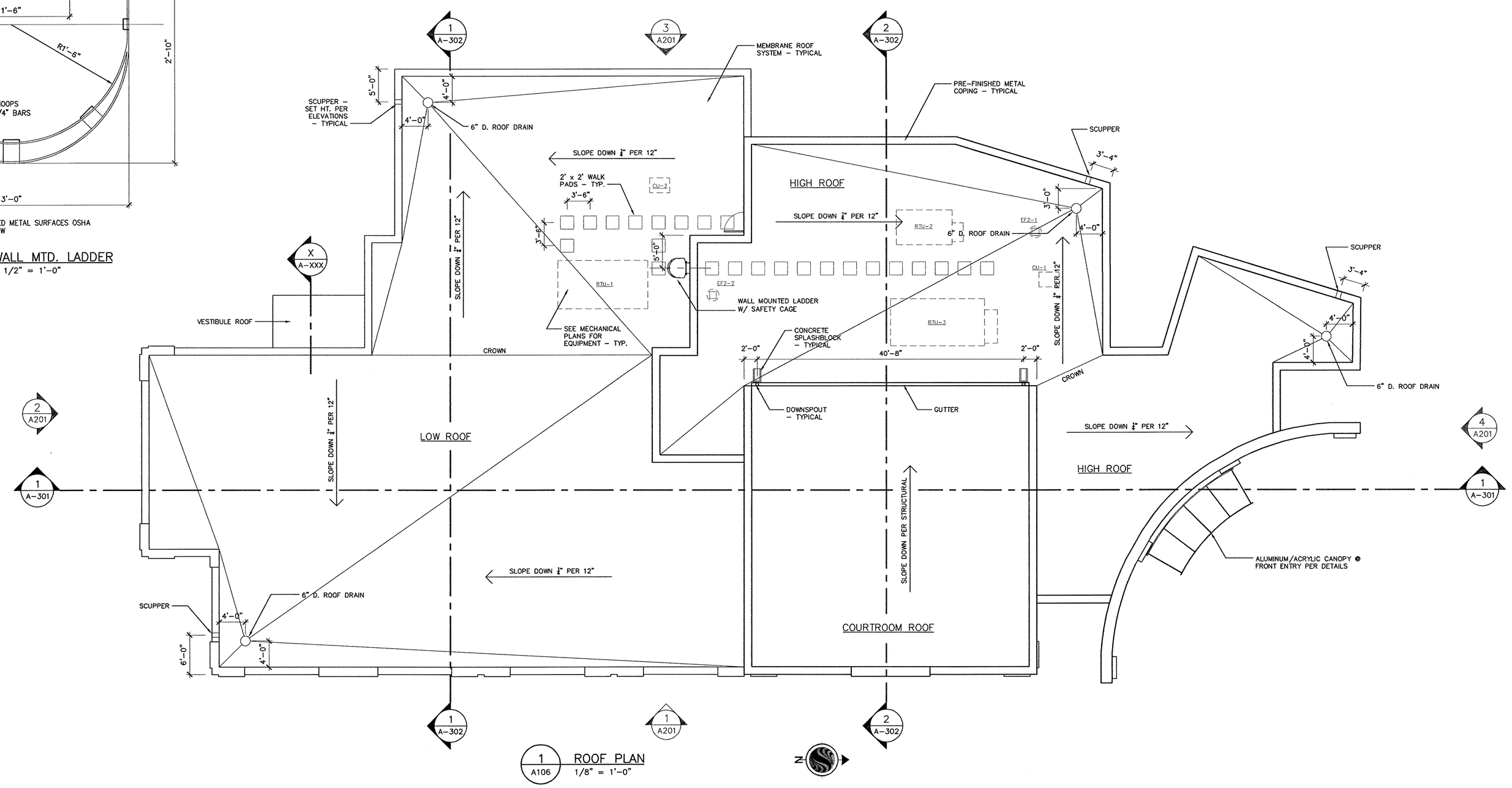

1 A106 ROOF PLAN
1/8" = 1'-0"

Stantec Architecture Inc.
Suite 200, 150 Oak Plaza Blvd.
Winston–Salem NC U.S.A.
27105
Tel. 336.759.7400
Fax. 336.759.7800
www.stantec.com

Stantec

Copyright Reserved

The Contractor shall verify and be responsible for all dimensions. DO NOT scale the drawing – any errors or omissions shall be reported to Stantec Consulting Inc. without delay.
The Copyrights to all designs and drawings are the property of Stantec Architecture Inc. Reproduction or use for any purpose other than that authorized by Stantec Consulting Inc. is forbidden.

Consultants

Notes

Revision	By	Appd.	Date
0 ISSUED FOR OWNER REVIEW	SAS	RRP	05.09.05
Issued	By	Appd.	Date

File Name: A106.DWG

Permit-Seal

FOR OWNER REVIEW

DO NOT USE FOR CONSTRUCTION

Client/Project

CITY OF LOCUST GROVE

POLICE STATION / DISTRICT COURT FACILITY

Locust Grove, Georgia

Title

ROOF PLAN, DETAILS

Project No.	Scale	
172400370	AS NOTED	
Drawing No.	Sheet	Revision
A106	of	0

U:\172400370\resource\Sheets\Architecture\a106.dwg, 5/16/2005 2:44:41 PM, sasrider, 1:1